RFP

Ponderal Flow Measurer

The Ponderal flow measurer executes weighing, dosing and mixing of different amounts of cereals. Thanks to an electronic system, it is possible to set up the capacity per hour for each single RFP directly on the machine or remotely via computer thanks to a serial connection RS 485 or, optionally, PROFIBUS.

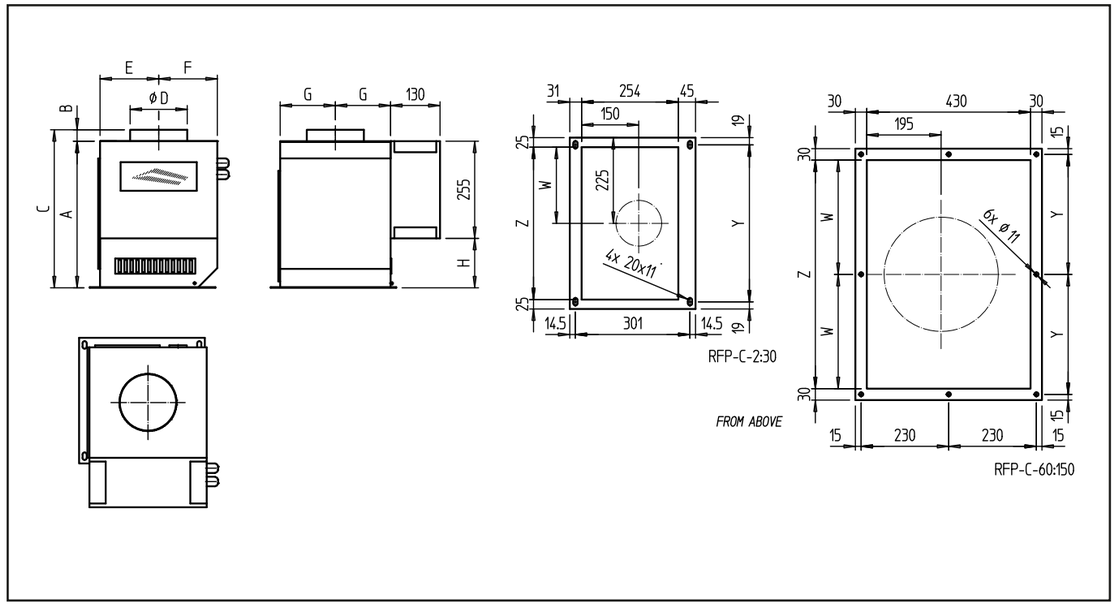

Model	*Capacity t/h	A	B	C	ØD	E	F	G	H
RFP-C-2	2	385	30	415	120/150	154	154	145	130
RFP-C-5	5	385	30	415	120/150	154	154	145	130
RFP-C-10	10	385	30	415	120/150	154	154	145	130
RFP-C-20	20	385	30	415	200	154	154	205	130
RFP-C-30	30	385	30	415	200	154	154	205	130
RFP-C-60	60	580	40	620	300	198	235	300	120
RFP-C-100	100	580	40	620	300	198	235	300	120
RFP-C-150	150	580	40	620	300	198	235	350	120

Model	Y	Z	W
RFP-C-2:10	292	280	145
RFP-C-20:30	412	400	205
RFP-C-60:100	600	315	300
RFP-C-150	700	365	350

* Soft wheat 0,75t/m^3
Units = mm

GOLFETTO SANGATI
INDUSTRIES