TPA

Intensive Scourer

Machine designed to perform an intensive cleaning of the grain kernel surface. This happens thanks to friction that is caused by the featured agitating blades and a perforated mantel which also enable the product to advance and be remixed before going through a metallic mesh covering the rotor.

TPA 35-135

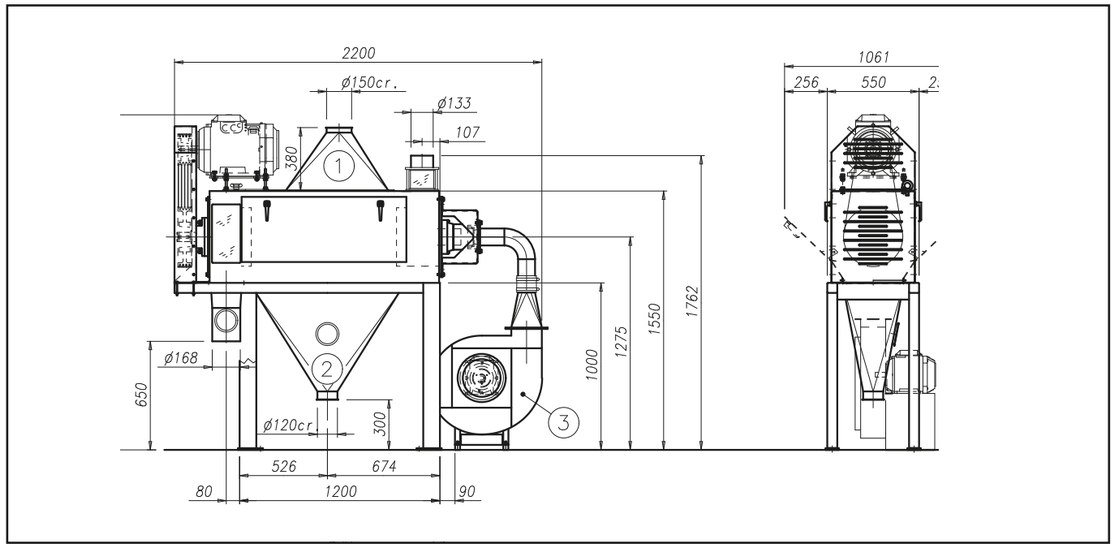

TPA 50-165

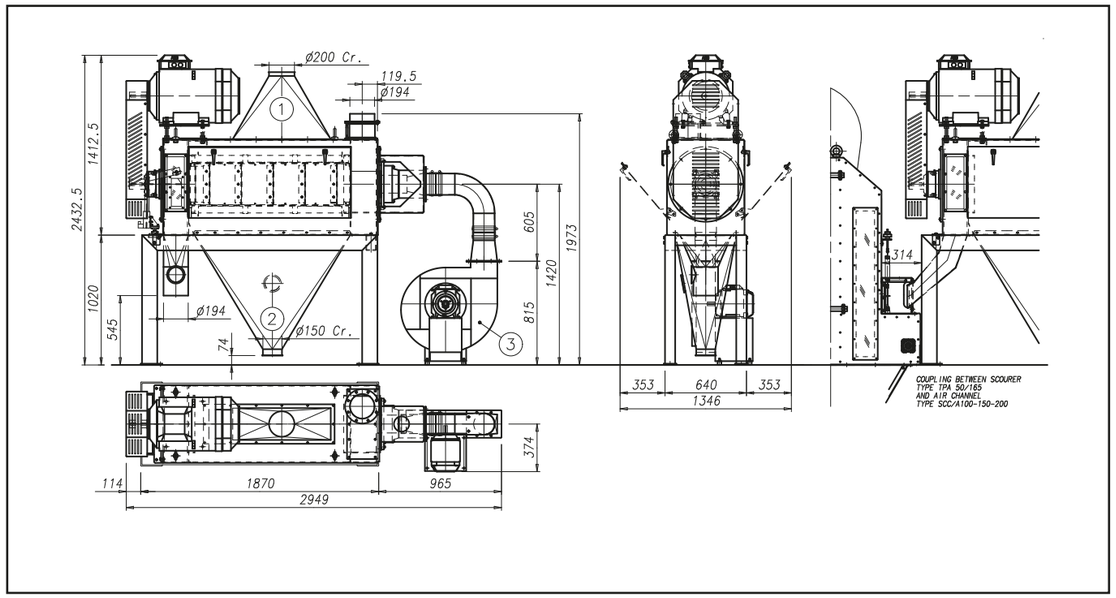

Type	*Capacity t/h	Power Kw	Aspiration 1 m³/min	Aspiration 1 mmH20	Aspiration 2 m³/min	Aspiration 2 mmH20	Fan 3 Kw	Fan 3 m³/min	Weight Kg	Volume m³
TPA 35-135	8	15	10	50	15	50	3	25	660	3
TPA 50-165	10 15 20	22 37 45	30	50	10	50	4	35	1200	5

* Soft wheat 0,75t/m³

Units = mm

GOLFETTO SANGATI
INDUSTRIES